ROOF

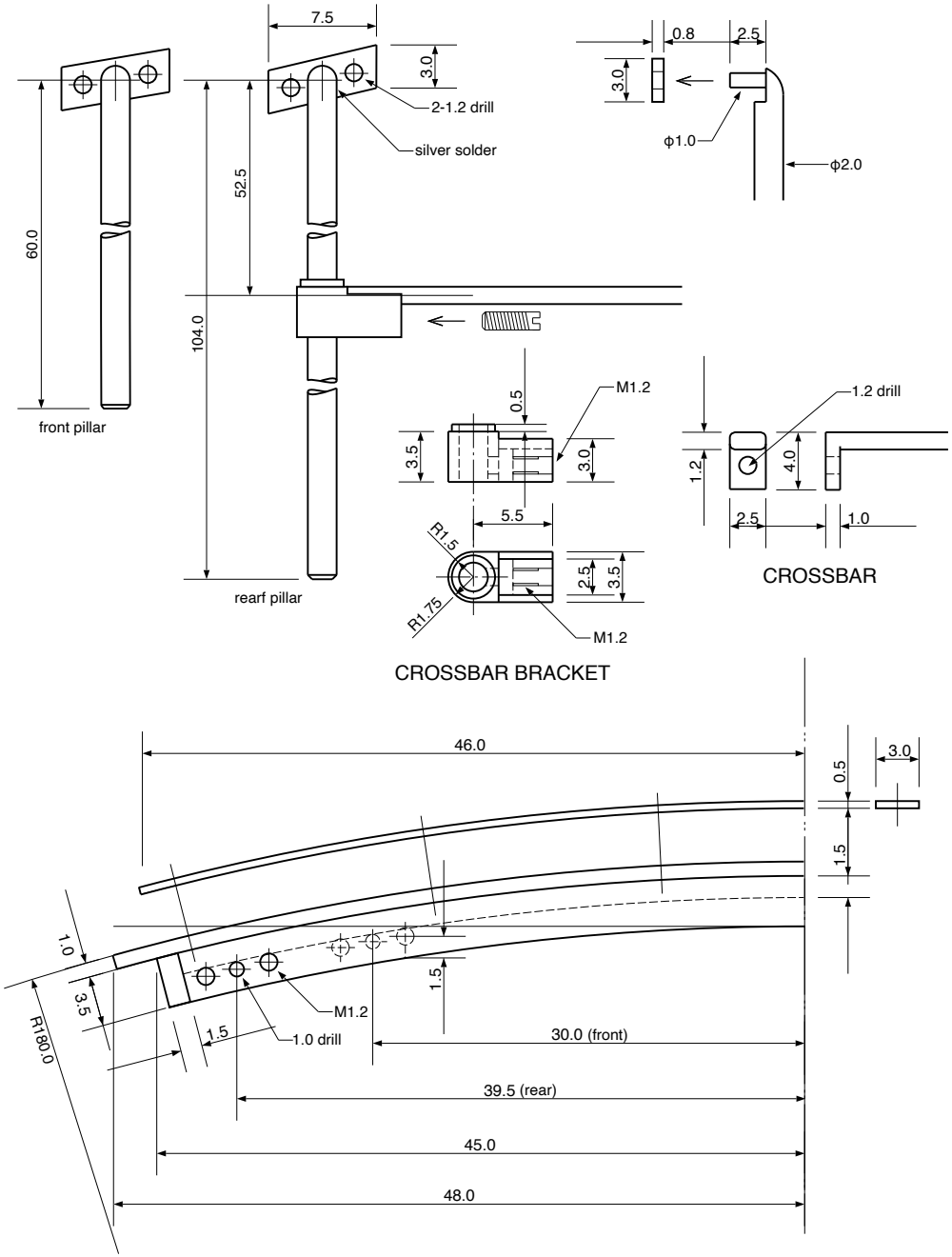
7.5
3.0
2-1.2 drill
silver solder
52.5
60.0
104.0
front pillar
rearf pillar
0.8
2.5
3.0
ϕ1.0
ϕ2.0
0.5
M1.2
3.5
3.0
5.5
R1.5
R1.75
2.5
3.5
M1.2
CROSSBAR BRACKET
1.2 drill
1.2
4.0
2.5
1.0
CROSSBAR
46.0
0.5
3.0
1.5
1.0
3.5
1.5
M1.2
1.0 drill
R180.0
30.0 (front)
39.5 (rear)
45.0
48.0

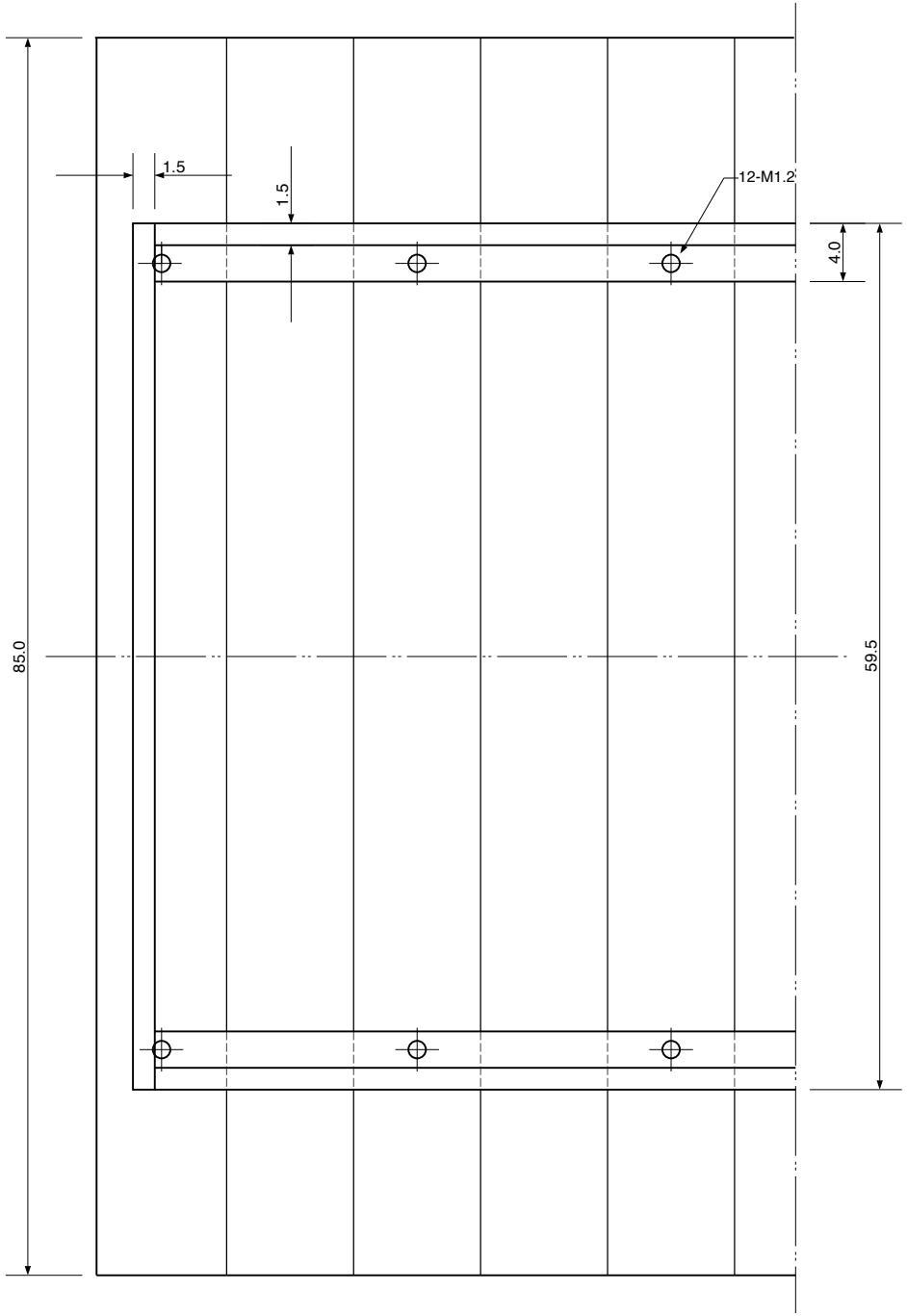
1.5
1.5
12-M1.2
4.0
85.0
59.5