SPRINGS / AXLE BOXES

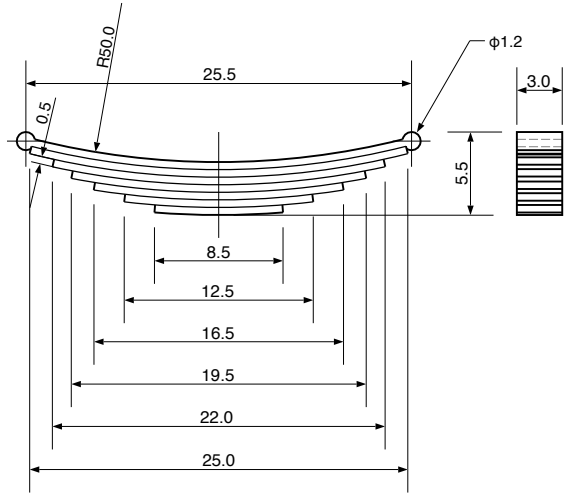

LEAF SPRING
x4

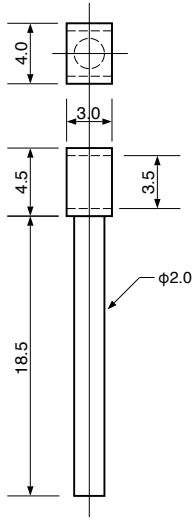

PRESSURE ROD
x4

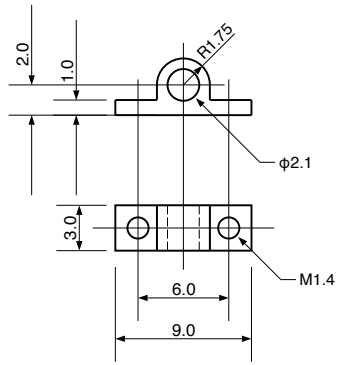

PRESSURE ROD SUPPORT BRACKET
x8

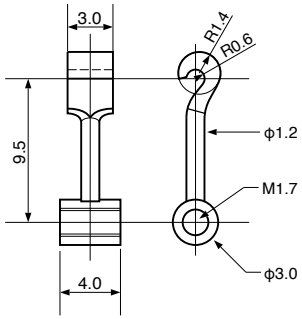

SPRING HANGER
x8

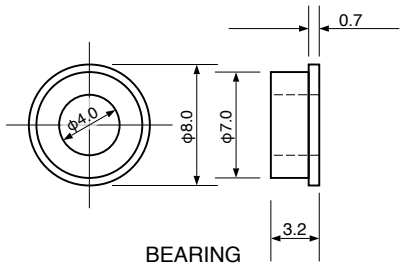

BEARING
x4

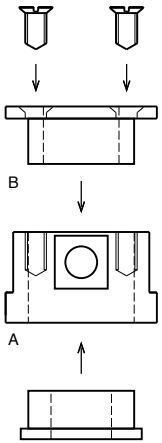

BEARING

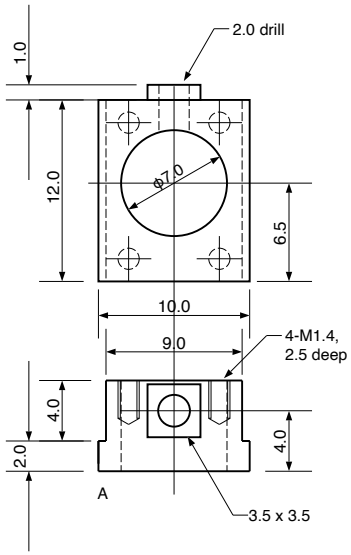

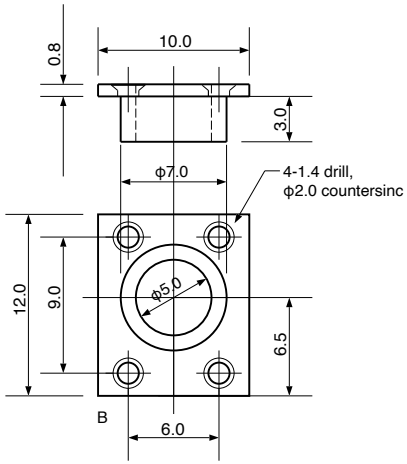

AXLE BOX
x4

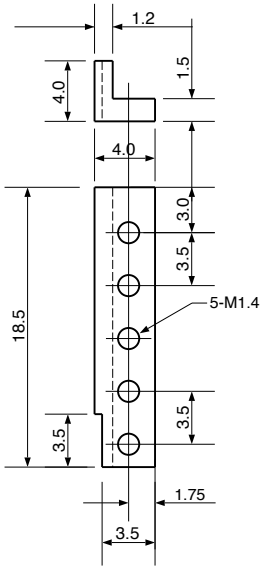

HORN BLOCK
x4 pair

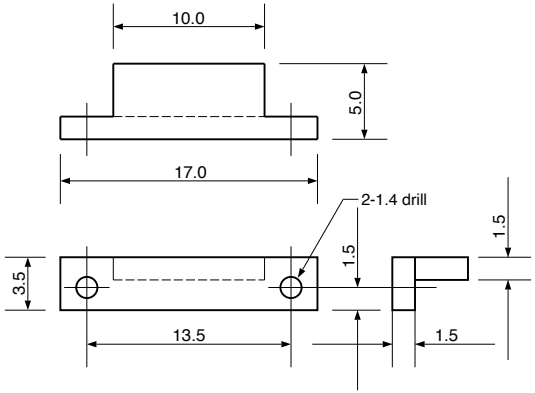

KEEPER PLATE
x4