VALVE MOTION DETAIL

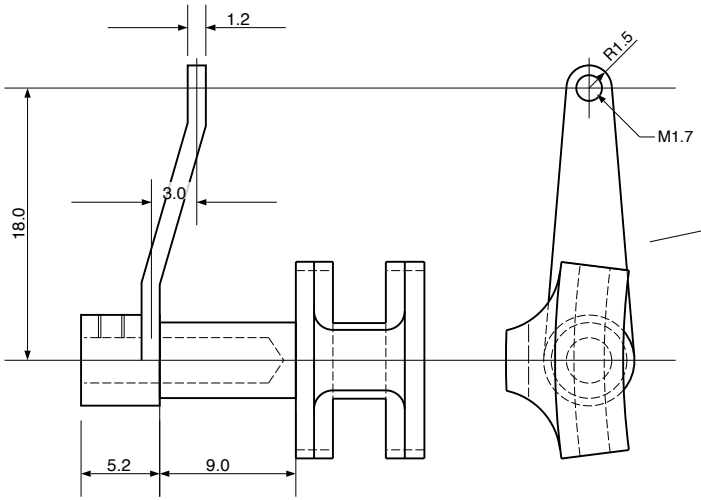

REVERSING LEVER & RADIUS BLOCK(right hand)
x1

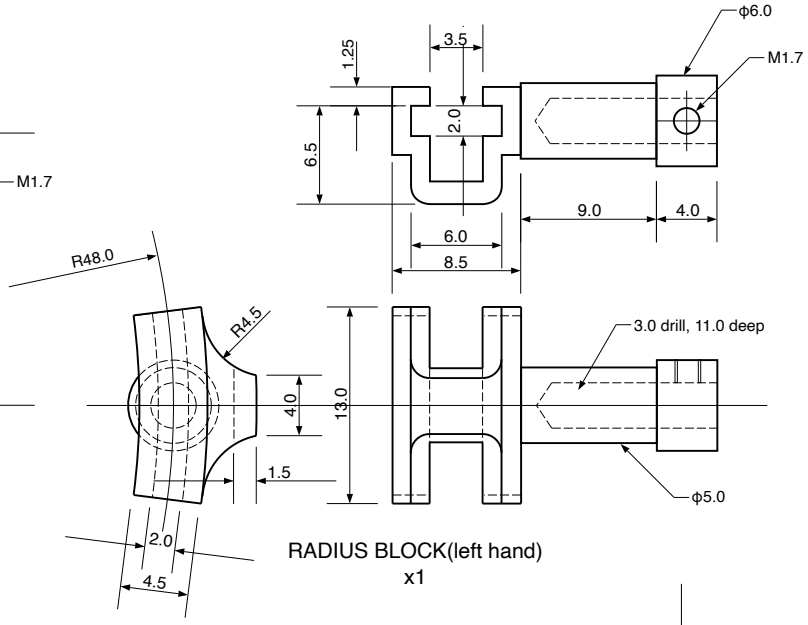

RADIUS BLOCK(left hand)
x1

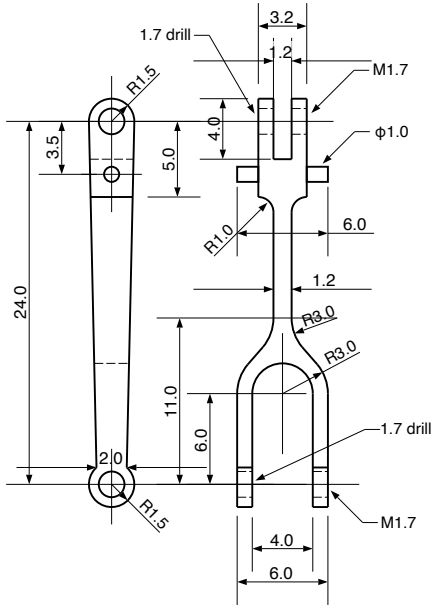

VIVERATING LEVER
x2

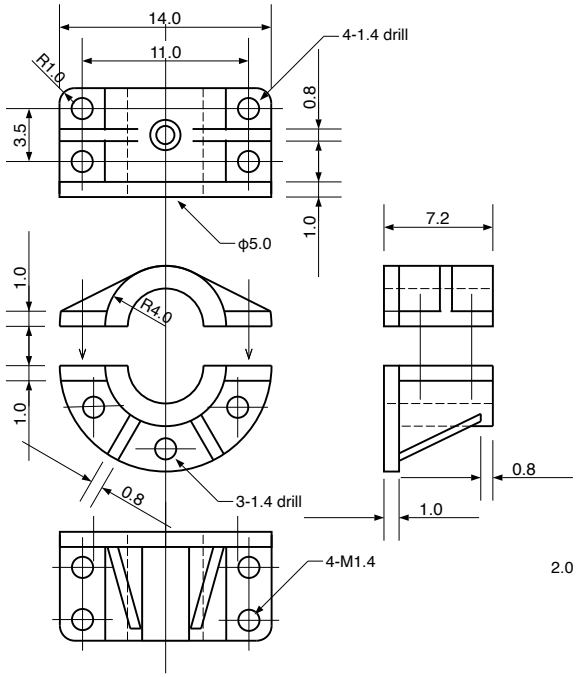

BRAKETS FOR RADIUS BLOCK
x2

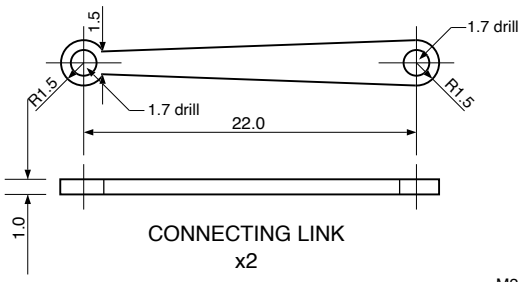

CONNECTING LINK
x2

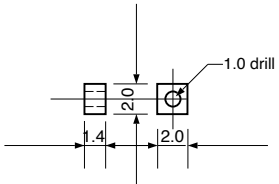

RADIUS DIE
x4

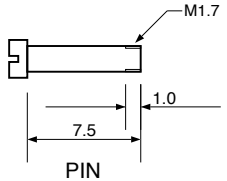

PIN
x2

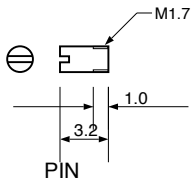

PIN
x2

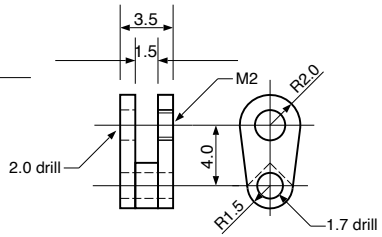

LINK FOR VIBRATING LEVER
x2

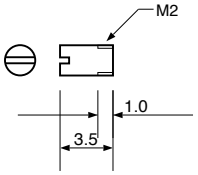

PIN
x2

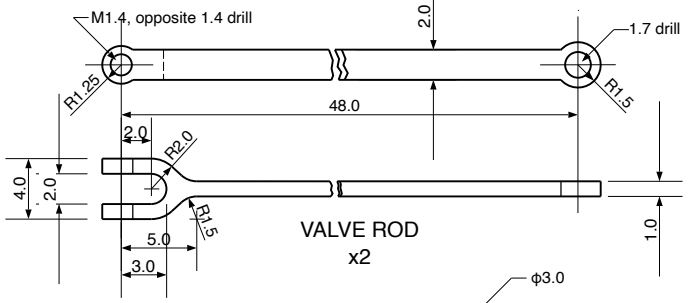

VALVE ROD
x2

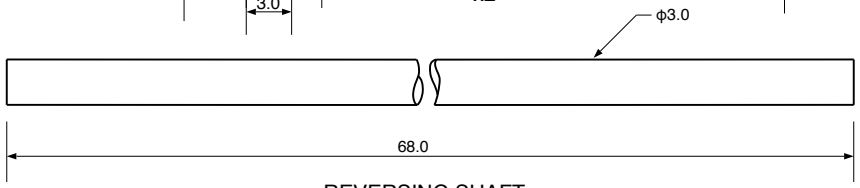

REVERSING SHAFT
x1