VALVE MOTION DETAILS

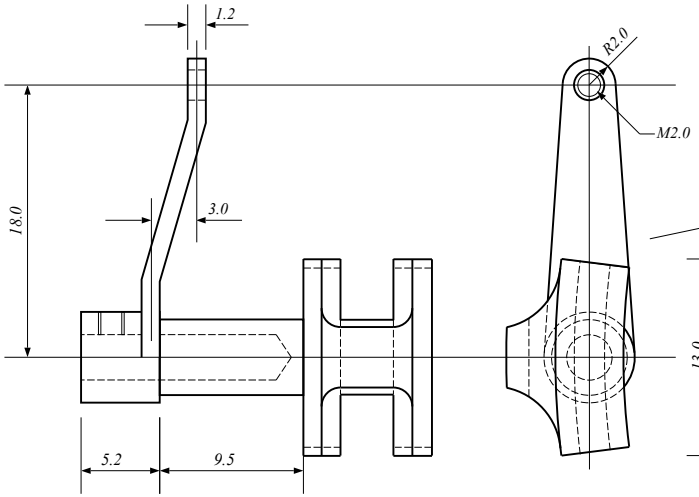

REVERSING LEVER & RADIUS BLOCK(right hand)
×1

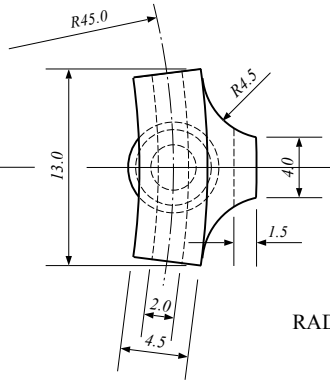

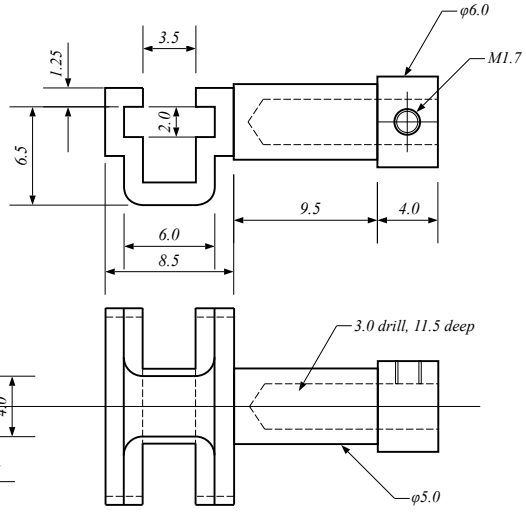

RADIUS BLOCK(left hand)
×1

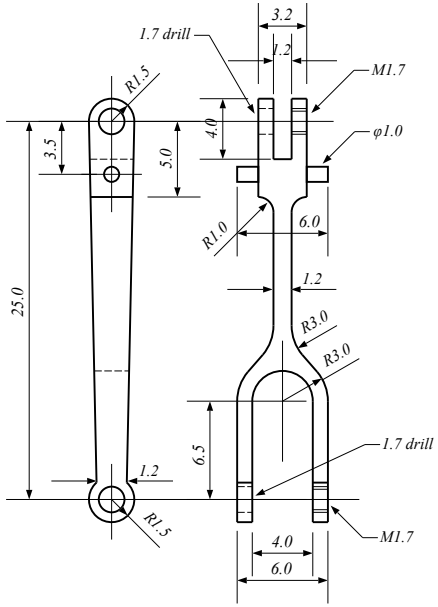

VIVERATING LEVER
×2

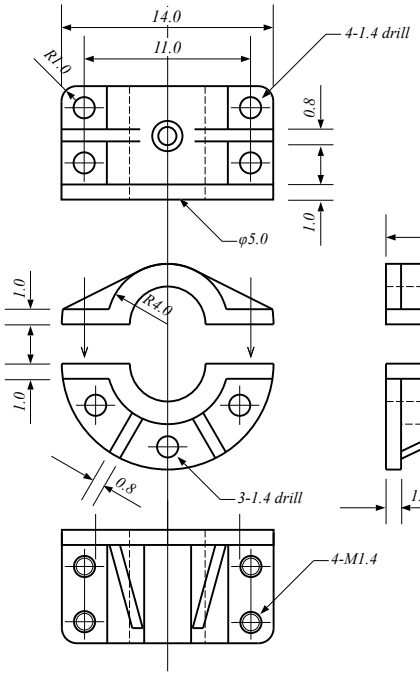

BRAKETS FOR RADIUS BLOCK
×2

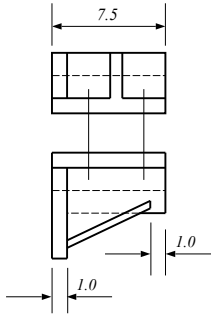

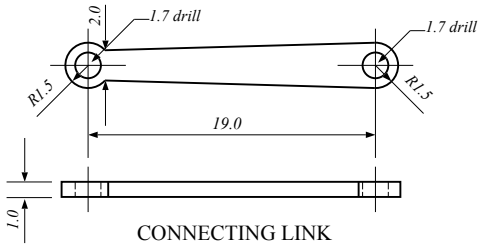

CONNECTING LINK
×2

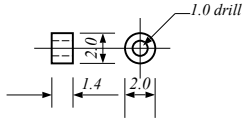

RADIUS DIE
×2

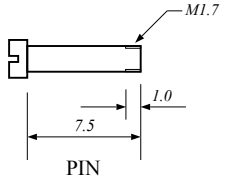

PIN
×2

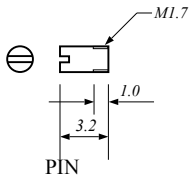

PIN
×2

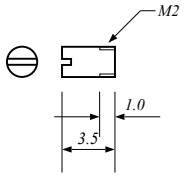

PIN
×2

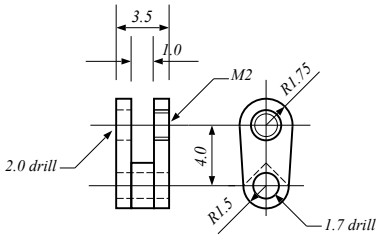

LINK FOR VIBRATING LEVER
×2

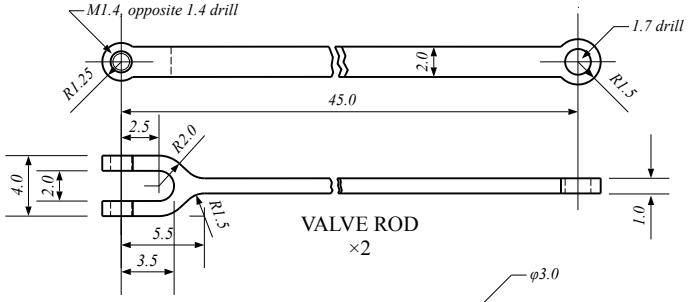

VALVE ROD
×2

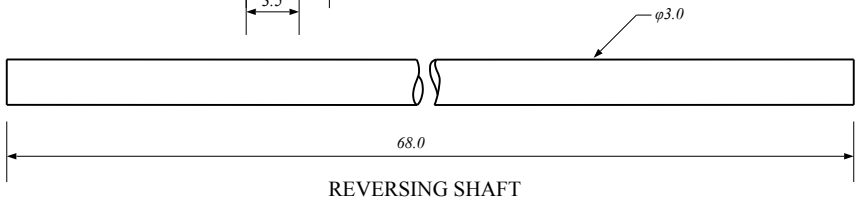

REVERSING SHAFT
×1